PART NO.
CBLIO-X

PART REVISIONS				
ECO	REV	DESCRIPTION	DATE	APPROVED
3027	1	PRODUCTION RELEASE	2/26/02	TC
3118	2	ADD COLOR CODE	4/29/02	TC
	3	ADD REV 2 COLOR CODE	9/16/03	MT

NOTES:
1 PN CBLIO-X IS A CABLE FOR 15 PIN I/O CONNECTOR ON SN2300D AND SN3400D SERIES SMARTMOTORS.

WHERE "X" IS THE LENGTH IN METERS. AVAILABLE IN LENGTHS 3, 5 & 10 METER. THE PART NUMBERS ARE:

P/N	CBLIO-3M	CBLIO-5M	CBLIO-10M
LEN 1	9'-10 " (3 METER)	16'-4 " (5 METER)	32'-9" (10 METER)

2 THE CONNECTOR HAS OVERMOLDED HOOD AND STRAIN RELIEF.
3 FINISH:
HOOD COLOR: GREY
CABLE COLOR: GREY

4 CONDUCTOR SIZE: 26 AWG, SHIELDED.

5 CABLE WILL HAVE ONE OF THE FOLLOWING COLOR CODE, REV 1 OR REV 2.

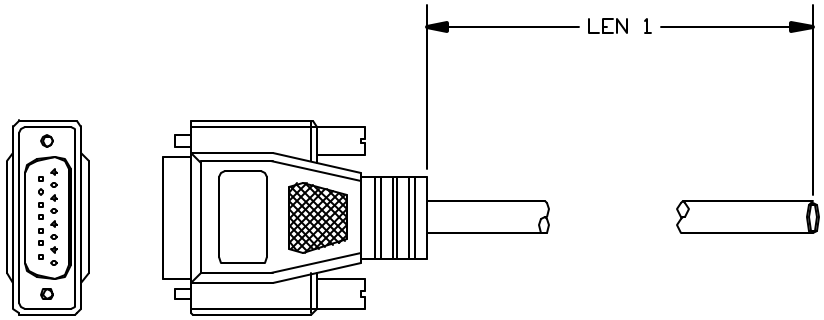

PINOUT COLOR CODE

PIN#	FUNCTION:	COLOR: REV 1	COLOR: REV 2
1	I/O A	BROWN	BLACK
2	I/O B	BROWN/WHITE	WHITE
3	I/O C	RED	RED
4	I/O D	RED/WHITE	GREEN
5	I/O E	PINK	ORANGE
6	I/O F	ORANGE	BLUE
7	I/O G	YELLOW	WHITE/BLACK
8	ENCODER A OUT	GREEN	RED/BLACK
9	ENCODER B OUT	CYAN	GREEN/BLACK
10	RS232 TX	BLUE	ORANGE/BLACK
11	RX232 RX	PURPLE	BLUE/BLACK
12	+5VDC OUT	GREY	BLACK/WHITE
13	SIGNAL GND	WHITE	RED/WHITE
14	PWR GND	BLACK	GREEN/WHITE
15	POWER	BLACK/WHITE	BLUE/WHITE

ITEM NO.	QTY	PART NO.	DESCRIPTION	MATERIAL SPECIFICATION

PARTS LIST

UNLESS OTHERWISE SPECIFIED,DIMENSIONS & TOLERANCES ARE PER ANSI Y14.5M AND ARE IN INCHES. TOLERANCES ARE AS FOLLOWS
DECIMALS .XX± .XXX± ANGLES ± .XXX°

THIRD ANGLE PROJECTION

APPROVALS	DATE
DRAWN MT	04/19/02
CHECKED	
ENGINEER	
SCALE	

MATERIAL
FINISH

Animatics Corporation

TITLE
CABLE, IO DB15
FLYING LEAD

SIZE B | COMPUTER GENERATED DRAWING | PART NO. CBLIO-X | REV 3

SIMILAR TO: | CAD FILE NAME CBLIO-X | SHEET 1 OF 1

[redacted]